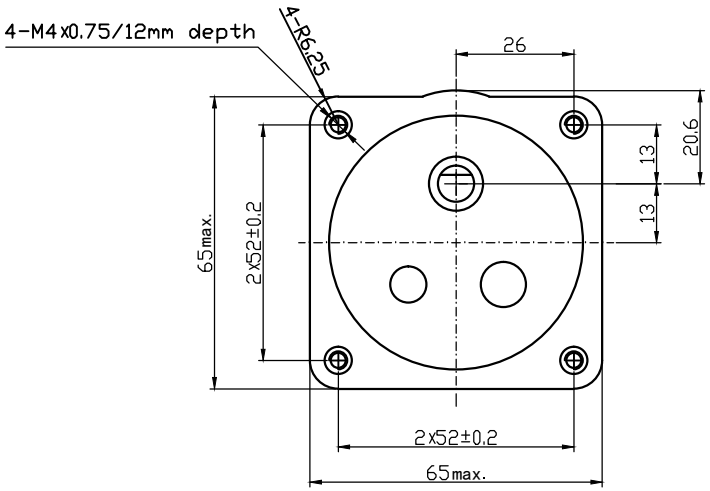

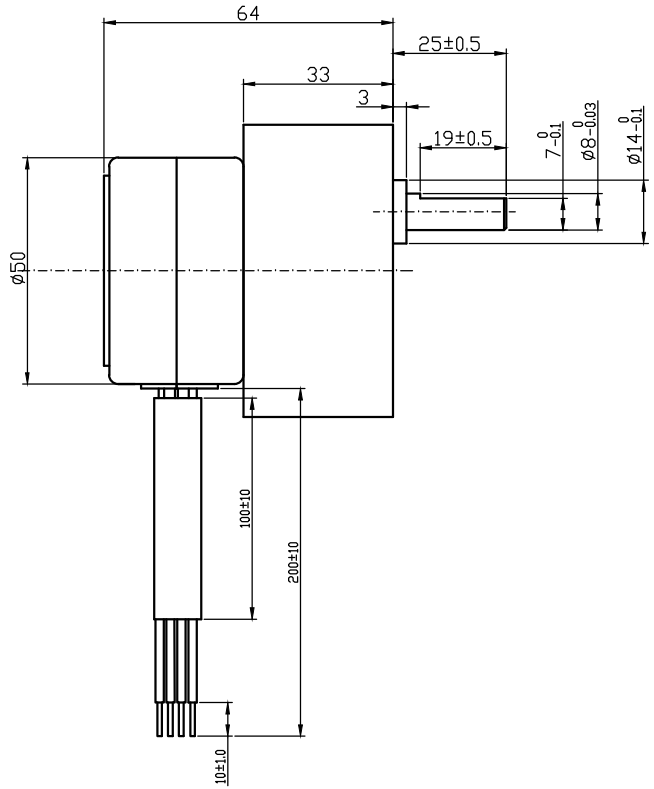

Technical Dataotor

Item	Unit	Measurement
Speed (50/60Hz)	RPM	1.0
Capacitor	μF	0.224
Input Power	W	<10
Torque	N.M	>11
Voltage	VAC	230
Frequency	HZ	50
Input Current	mA	<40
Noise	dB	<40
Starting Voltage	VAC	<190
Insulating Resistance	MΩ	⩾500
Motor Torque	mN.M	>30
Gearbox	Ratio	485.5
Direction of rotation: CCW & CW		

Item	Measurement
Degree of protection	IP40
Ambient temperature	℃-20...+60
Lateral force F_R	50N
Axial thrust F_A	10N
Work life	40000 hours

data plate

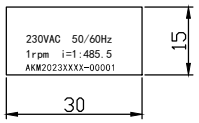

2024/02/20/fm